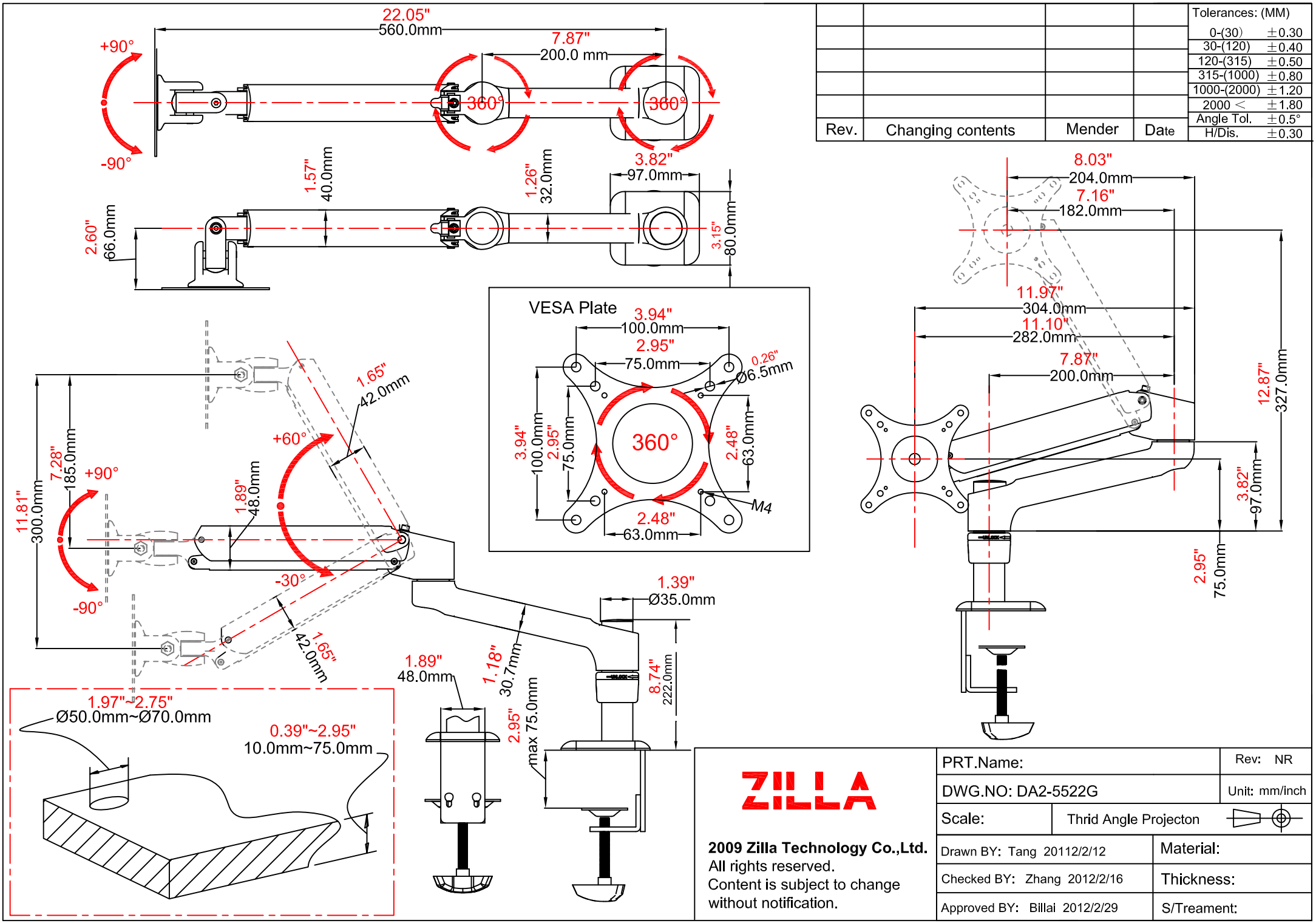

Rev.	Changing contents	Mender	Date

Tolerances: (MM)	
0-(30)	±0.30
30-(120)	±0.40
120-(315)	±0.50
315-(1000)	±0.80
1000-(2000)	±1.20
2000 <	±1.80
Angle Tol.	±0.5°
H/Dis.	±0.30

ZILLA

2009 Zilla Technology Co.,Ltd.
All rights reserved.
Content is subject to change without notification.

PRT.Name:		Rev: NR
DWG.NO: DA2-5522G		Unit: mm/inch
Scale:	Thrid Angle Projecton	
Drawn BY: Tang 20112/2/12		Material:
Checked BY: Zhang 2012/2/16		Thickness:
Approved BY: Billai 2012/2/29		S/Treament: